"A" SIZE COPY

SIZE B | DRAWING NO. 300-80-318

SOLITRON/MICROWAVE
PORT SALERNO, FLORIDA

MARK LABEL PER PARTS LIST

CONNECTOR TYPE.....TNC PLUG, R/A CRIMP/CLAMP, CABLED.

CABLE TYPE.....RG-303/U.

SPECIAL TOOL.....CRIMP TOOL M22520/10-07 (.213 die).

PARTS SUPPLIED

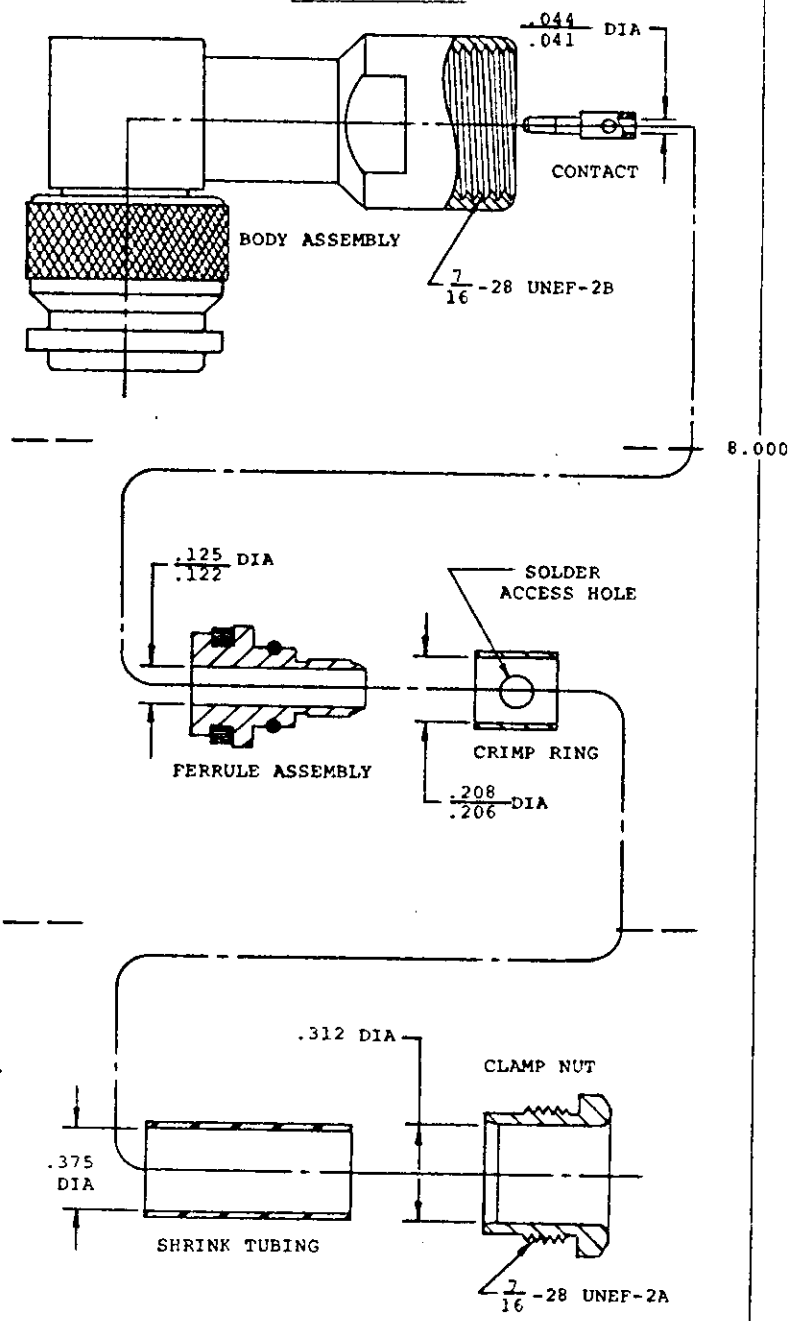

300-80-318

SOLITRON/MICROWAVE
PORT SALERNO, FLORIDA

UNFOLD FOR ASSEMBLY INSTRUCTIONS

SYM	DESCRIPTION	DATE	APPR.
—	RELEASE F-7967	10-80	

UNLESS OTHERWISE SPECIFIED
1. ALL DIMENSIONS ARE IN INCHES
2. TOLERANCES: THREE PLACE DECIMALS ±.005; TWO PLACE DECIMALS ±.015; ANGULAR ±1°
3. REMOVE ALL BURRS & SHARP EDGES .005 MAX
4. CHAMFER 1ST & LAST THREADS 45°
5. ALL DIAMETERS TO BE CONCENTRIC WITHIN .005 T.I.R.
6. SURFACE ROUGHNESS (MIL-STD-10)

DRAWN — DATE
CHECKED — DATE 10-27-80
APPROVED DGG DATE 10/28/80

ITEM NO. | NAME OF PART | NO. REQ. | PART NO.

SCALE — | CODE IDENT NO. 95077 | SIZE B

MATERIAL — | FINISH —

SOLITRON/MICROWAVE
PORT SALERNO, FLORIDA

REF. MIL-C-39012 CAT. B

TITLE CABLE ASSEMBLY INSTRUCTIONS

DRAWING NO. 300-80-318 | SHEET 1 OF 2

"A" SIZE COPY

2.750

SIZE B | DRAWING NO. 300-80-318

ASSEMBLY INSTRUCTIONS

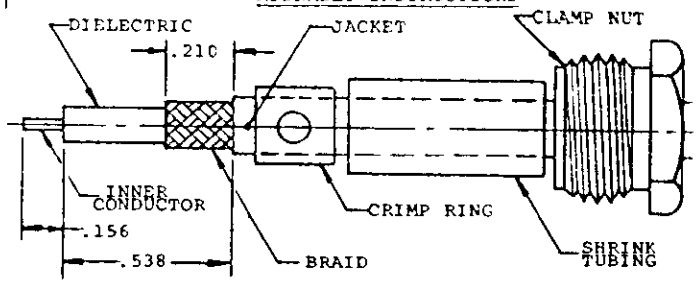

1.0 PREPARE CABLE END
- 1.1 Slide clamp nut, shrink tubing and crimp ring onto cable.
- 1.2 Trim cable jacket, braid, dielectric and inner conductor to dimensions shown.
- 1.3 Do not nick braid.

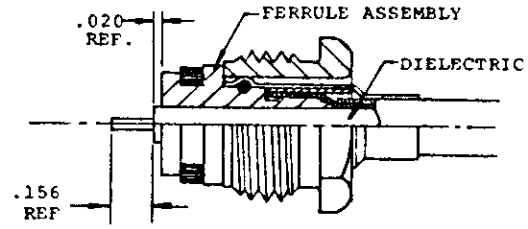

2.0 ATTACH CABLE BRAID TO FERRULE ASSEMBLY
- 2.1 Slide ferrule assy onto dielectric until it bottoms under braid.
- 2.2 Slide crimp ring forward and bottom on ferrule assy shoulder.
- 2.3 Attach ferrule assy to cable by either of two methods:
  - (a) "crimp" crimp ring using crimp tool M22550/10-07 (.213 die).
  - (b) Soft solder crimp ring to braid & ferrule assy through access holes.
- 2.4 Position shrink tubing as shown & heat to shrink (2750 min.).

8.000

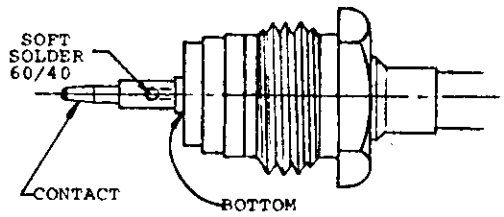

3.0 SOLDER INNER CONDUCTOR TO CONTACT
- 3.1 Tin inner conductor.
- 3.2 Slide contact onto inner conductor and bottom against dielectric.
- 3.3 Soft solder contact onto inner conductor.
- 3.4 Remove excess solder.

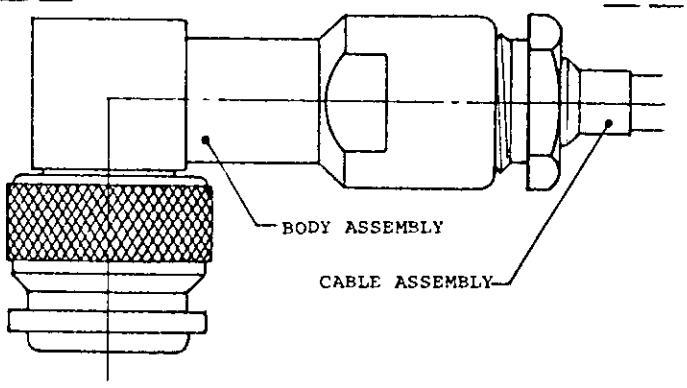

4.0 INSTALL CABLE ASSEMBLY INTO BODY ASSEMBLY
- 4.1 Wrench tighten cable assembly into body assembly using recommended torque: 35-40 in. lbs.

SYM	DESCRIPTION	DATE	APPR.
—	RELEASE F-7967	10-80	

UNLESS OTHERWISE SPECIFIED
1. ALL DIMENSIONS ARE IN INCHES
2. TOLERANCES: THREE PLACE DECIMALS ±.005 TWO PLACE DECIMALS ±.010 ANGULAR ±1°
3. REMOVE ALL BURRS & SHARP EDGES .005
4. CHAMFER 1ST & LAST THREADS 45°
5. ALL DIAMETERS TO BE CONCENTRIC T.I.R. WITHIN
6. SURFACE ROUGHNESS (MIL-STD-10)

DRAWN — DATE
CHECKED — DATE 10-27-80
APPROVED DGG DATE 10/28/80

ITEM NO. | NAME OF PART | NO. REQ. | PART NO.

SOLITRON/MICROWAVE
PORT SALERNO, FLORIDA

MATERIAL — FINISH — SCALE —

CODE IDENT NO. 95077 | SIZE B

REF. MIL-C-39012 CAT. B

TITLE CABLE ASSEMBLY INSTRUCTIONS

DRAWING NO. 300-80-318 | SHEET 2 OF 2