ROHS COMPLIANT

PRODUCT DATA DRAWING

REVISION HISTORY			
REV	DESCRIPTION	DATE	APPROVED
C	DCN 43277	04/17	MAL
D	DCN 50463	01/21	FSG

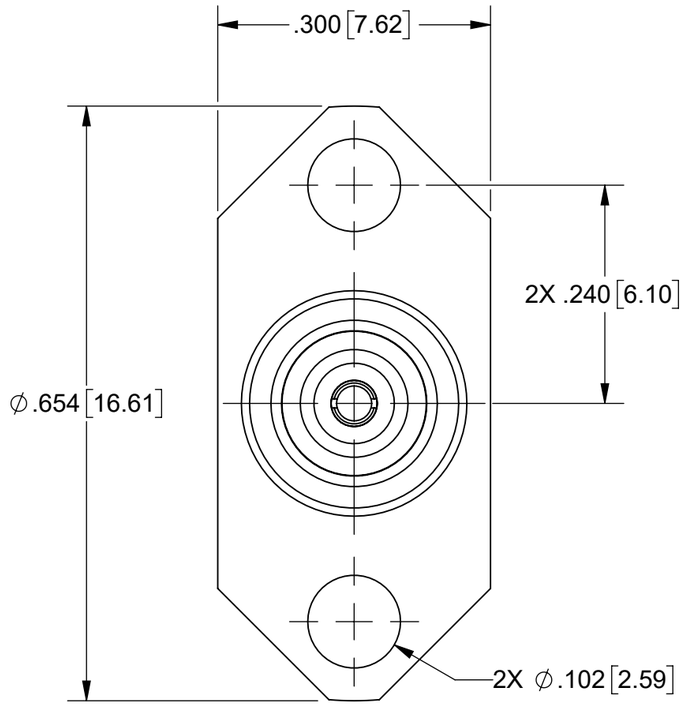

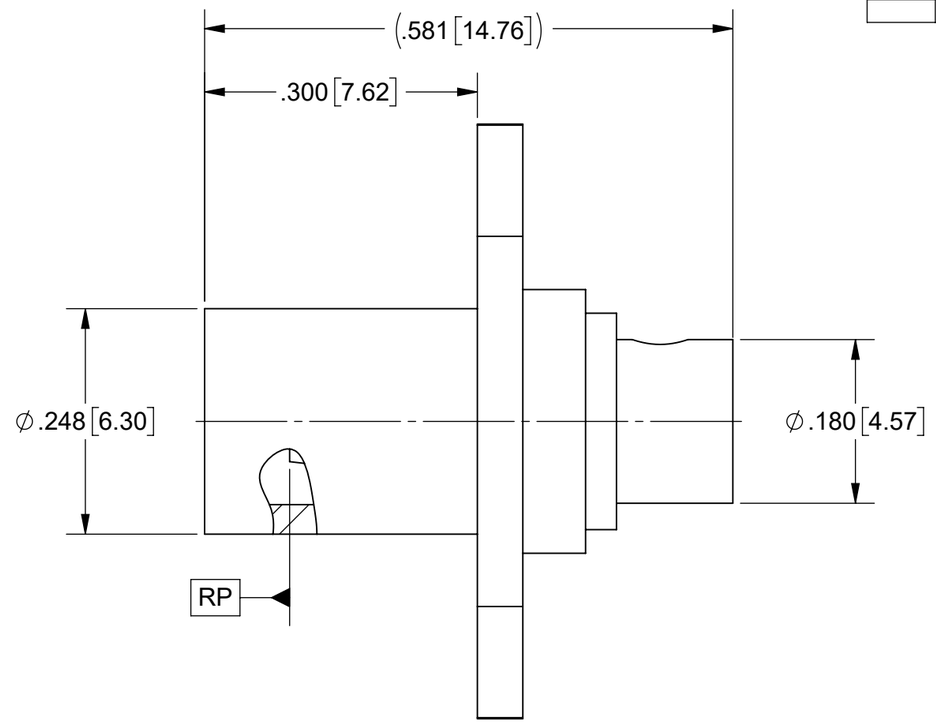

MATERIAL:

BODY: STAINLESS STEEL PER AMS-5640, ALLOY UNS S30300, TYPE 1 OR ASTM A582 TYPE 303, COND. A

CONTACT: BERYLLIUM COPPER PER ASTM B196, ALLOY No. UNS C17300, TD04

INSULATOR: PTFE PER ASTM D1710, TYPE I, GRADE 1, CLASS B

GASKET: SILICONE RUBBER PER A-A-59588, CLASS 2B, GRADE 60/70

FINISH:

FRONT BODY: PASSIVATED PER AMS-2700

READ BODY & CONTACT: GOLD PER ASTM B488, TYPE II, CODE C, CLASS 1.27, OVER NICKEL PER AMS-QQ-N-290, CLASS 1, .00005" MIN.

PERFORMANCE:

IMPEDANCE: 50 OHMS
FREQ. RANGE: DC TO 2.0 GHz.

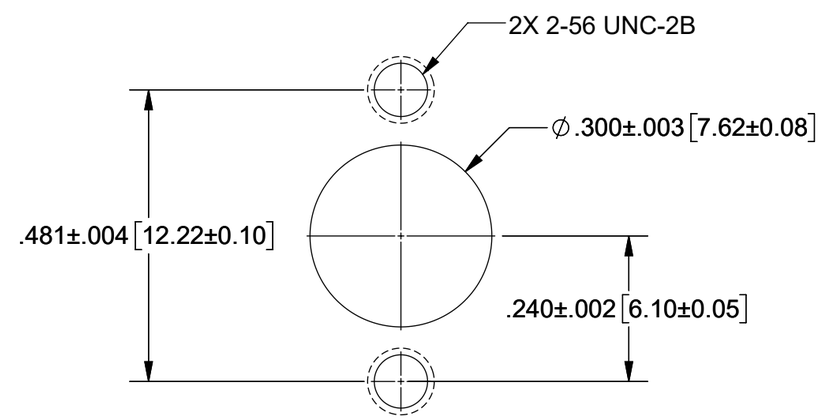

RECOMMENDED MOUNTING HOLE

MATERIAL:	SEE NOTES
FINISH:	SEE NOTES
SURFACE AREA:	N/A

PROPRIETARY

THE INFORMATION CONTAINED IN THIS DRAWING IS THE SOLE PROPERTY OF SV MICROWAVE, INC. ANY REPRODUCTION IN PART OR AS A WHOLE WITHOUT THE WRITTEN PERMISSION OF SV MICROWAVE, INC IS PROHIBITED.

DIMENSIONS ARE IN INCHES TOLERANCES:

FRACTIONAL: ±1/64 ANGULAR: X° ±1°0' X°X' ±15'

DECIMAL: .X ±.030 .XX ±.010 .XXX ±.005

INTERPRET DIMENSIONS AND TOLERANCES PER ASME Y14.5M - 1994

THIRD ANGLE PROJECTION

UNLESS OTHERWISE SPECIFIED

1) ALL DIMENSIONS ARE IN INCHES [MILLIMETERS]
2) ALL DIMENSIONS ARE AFTER PLATING.
3) BREAK CORNERS & EDGES .005 R. MAX.
4) CHAM. 1ST & LAST THREADS.
5) SURFACE ROUGHNESS 63±MIL-STD-10.
6) DIA.'S ON COMMON CENTERS TO BE CONCENTRIC WITHIN .005 T.I.R.
7) REMOVE ALL BURRS

DRAWN:	VB	04/03/17
CHECKED:	MAL	04/03/17
APPROVED:	MAL	04/03/17

Amphenol SV MICROWAVE
www.svmicrowave.com

TITLE: BZ HIGH POWER JACK 2-HOLE FLANGE MOUNT TO Ø.141 CABLE

SIZE B | DWG. NO. SF8835-6000

SCALE: 4:1 | SHEET 1 OF 1