AF 46658

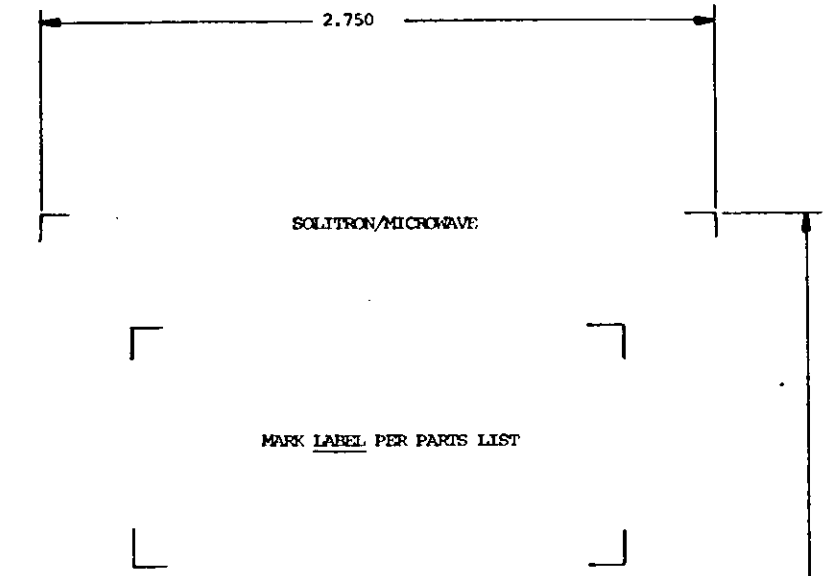

CONNECTOR TYPE..... SMA JACK, STRAIGHT, CABLED, SOLDER ATTACHMENT.

CABLE TYPE..... RG-405 SEMI-RIGID.

NOTE: TO MINIMIZE CABLE DIELECTRIC GROWTH DURING SOLDER OPERATION, NORMALIZE CABLE (THERMAL SHOCK MIL-STD-202, METHOD 107, COND. B) PRIOR TO FINAL TRIM PARA. 1.0.

4.700

PARTS SUPPLIED

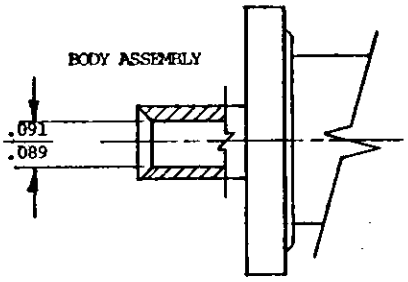

PICTORIAL BODY CONFIGURATION MAY VARY (FLANGE, HEX OR BULKHEAD)

SEE REVERSE SIDE FOR ASSEMBLY INSTRUCTIONS

300-80-700

SOLITRON/MICROWAVE

SYM	DESCRIPTION	DATE	APPR.
-	REL DCN F-11863	7/90	

UNLESS OTHERWISE SPECIFIED
1. ALL DIMENSIONS ARE IN INCHES
2. TOLERANCES:
THREE PLACE DECIMALS ±.005
TWO PLACE DECIMALS ±.010
ANGULAR ±1°
3. REMOVE ALL BURRS & SHARP EDGES .005
4. CHAMFER 1ST & LAST THREADS 45°
5. ALL DIAMETERS TO BE CONCENTRIC T.I.R. WITHIN
6. SURFACE ROUGHNESS 63 (MIL-STD-10)

DRAWN DA DATE 7/18/90
CHECKED DATE 8/23/90
APPROVED DATE 8/29/90

SOLITRON/MICROWAVE
PORT SALERNO, FLORIDA

MATERIAL
FINISH
AREA

SCALE —
CODE IDENT NO. 95077
SIZE B

REF. MIL-C-39012

TITLE CABLE ASS'Y INSTRUCTION

DRAWING NO. 300-80-700
SHEET 1 OF 2

SIZE B
DRAWING NO. 300-80-700

ENG. FILE COPY

AF 46658

ASSEMBLY INSTRUCTIONS

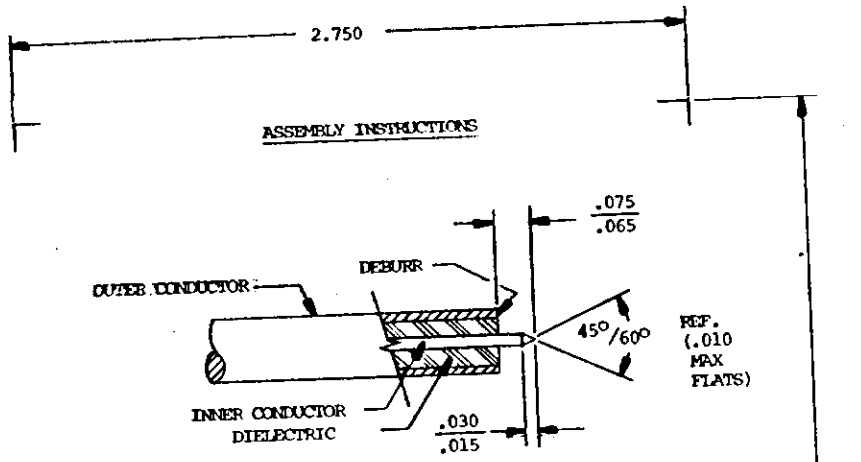

1.0 PREPARE CABLE END

1.1 TRIM CABLE OUTER CONDUCTOR/DIELECTRIC AND INNER CONDUCTOR AS SHOWN. DO NOT NICK INNER CONDUCTOR.

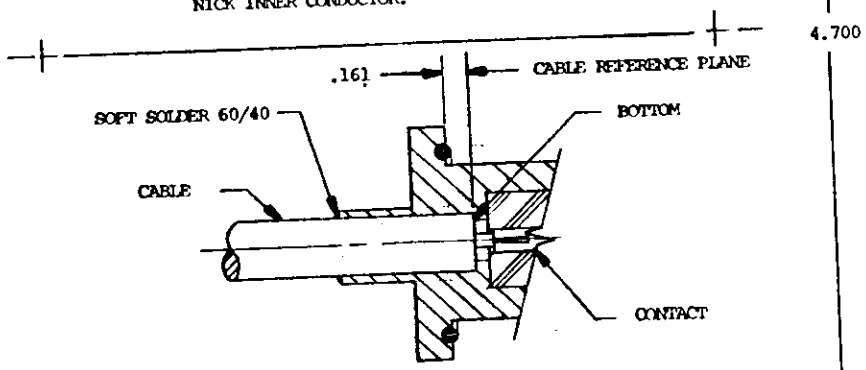

2.0 SOLDER CABLE TO BODY

2.1 INSERT CABLE INTO BODY.
2.2 AS INNER CONDUCTOR MATES WITH CONTACT, BOTTOM CABLE AGAINST SHOULDER, INSIDE BODY.
2.3 USING 60/40 SOLDER, SOLDER CABLE TO BODY, ALL AROUND, WHILE APPLYING SUFFICIENT PRESSURE TO KEEP CABLE BOTTOMED IN BODY DURING PROCESS.

ENG. FILE COPY

SYM	DESCRIPTION	DATE	APPR.
—	REL DCN F-11863	7/90	

UNLESS OTHERWISE SPECIFIED
1. ALL DIMENSIONS ARE IN INCHES
2. TWO PLACE DECIMALS ±.015 THREE PLACE DECIMALS ±.005
3. REMOVE ALL BURRS & SHARP EDGES .005 MAX.
4. CHAMFER 1ST & LAST THREADS 45°
5. CHAMFERS TO BE CONCENTRIC WITHIN T.I.R.
6. SURFACE ROUGHNESS 63 (MIL-STD-10)

DRAWN DA DATE 7/18/90
CHECKED DATE 8/23/90
APPROVED DATE 8-23-90

SOLITRON/MICROWAVE
PORT SALERNO, FLORIDA

MATERIAL
FINISH
AREA

SCALE —
CODE IDENT NO. 95077
SIZE B

REF. MIL-C-39012 S/R
TITLE CABLE ASS'Y INSTRUCTION
DRAWING NO. 300-80-700
SHEET 2 OF 2

SIZE B
DRAWING NO. 300-80-700